GLOBUS TECHNICAL DATA

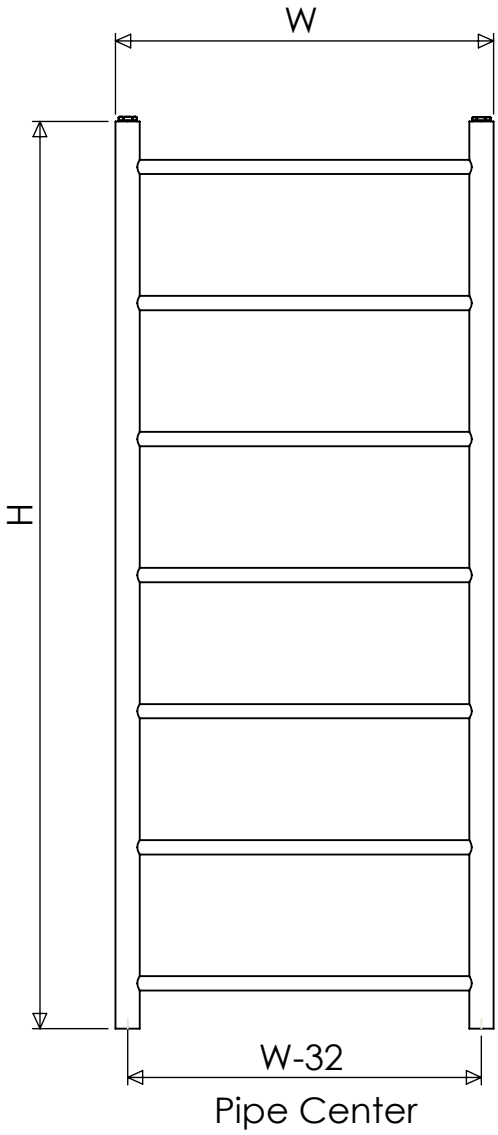

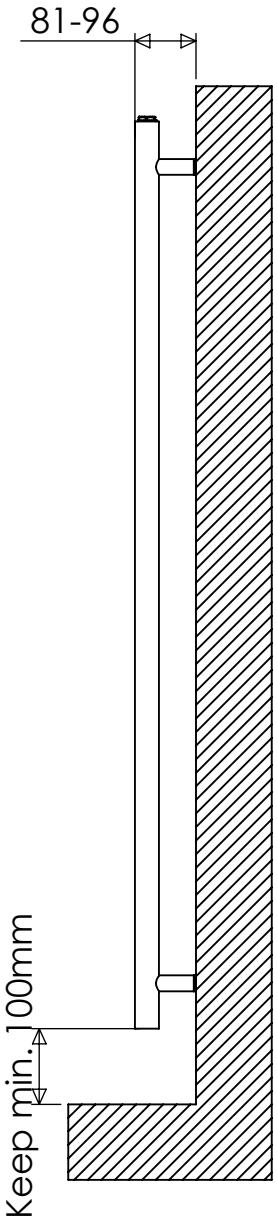

GLOBUS

FITTING INSTRUCTIONS

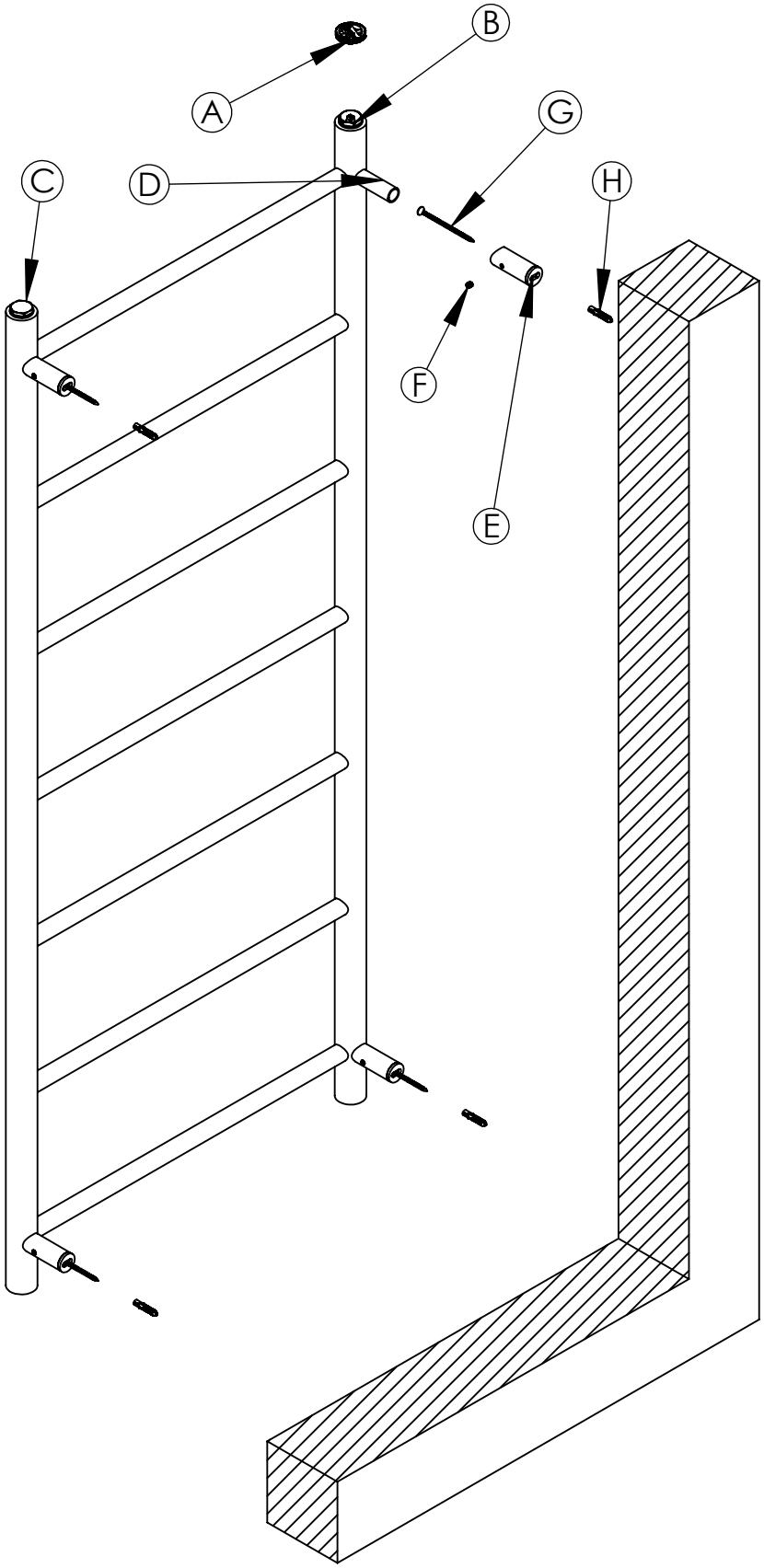

Key	Component	Qty
A	Bleeding Valve Key	1
B	Bleeding Valve 1/2 "	1
C	Blind tap	1
D	Stud	4
E	Round Wall	4
F	Grub Screw	4
G	Screw	4
H	Wall Plug	4

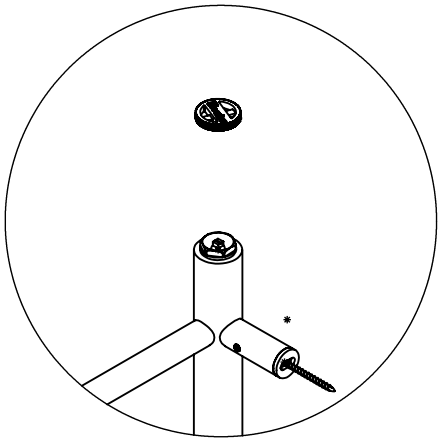

Assembly Instructions

Use Carisa bleeding valve key (A) to turn bleeding valve on final installation(B).

Accurately mark out bracket holes on wall using spirit level.

Drill four 8mm hole for each brackets (E).

Screw brackets (E) into wall plugs (H) with 5,5mm diameter x 45mm screws (G).

Assemble the studs (D) into the holes which on back of the collector.

Hang radiator by centering the studs (D) into the brackets (E).

Secure the stud (D) with the grub screw (G) after setting wall distance.